Journal of Engineering Sciences, Assiut University, Vol. 40, No. 4, pp.1075-1089, July 2012

EXPERIMENTAL AND NUMERICAL INVESTIGATION OF A CONDENSATION REPELLENT RADIANT COOLING PANEL SYSTEM

Ahmed Huzayyin, Hesham El-Batsh, Sameh Nada, and Shaimaa Seyam

Mechanical Engineering Department Benha Faculty of Engineering, Benha University, Benha, Egypt

(Received April 22, 2012 Accepted May 8, 2012)

Radiant cooling panels (RCP) use controlled-temperature surfaces to provide heat transfer mainly by radiation. In this study, the performance of RCP system is investigated using experimental measurements and numerical calculations. In the experimental study, a radiant cooling panel system equipped with cooling coils was examined in a vacant room. The power consumption, condensation rate and thermal comfort were studied experimentally. A numerical model was also employed to study flow pattern inside the room and to predict temperature distributions. The flow field was obtained by solving the flow governing equations namely continuity, momentum and energy equations. The turbulent flow was solved by using Re-Normalization Group RNG k-ε turbulence model. Heat transfer by radiation was modeled using Discrete Ordinates DO radiation model. The effect of the radiant panel surface temperature and exit air temperature from the panel were studied. The results showed that the used numerical technique could predict temperature distribution in the room with reasonable accuracy. It was found through this study that RCP provide thermal comfort and is energy efficient.

KEYWORDS: *Radiant cooling panel; Numerical techniques; Experimental measurements; Thermal comfort*

1. INTRODUCTION

Cooling Panels use controlled-temperature surfaces fixed on or imbedded in room floor, walls, or ceiling. The temperature is maintained by circulating water or refrigerants through a circuit embedded in the panel. A controlled-temperature surface can be considered as a radiant panel if 50% or more of heat transfer is achieved by radiation to other surfaces [1]. Radiant panels employ no or few moving parts, are not room obstacles and emit no noise. However, they have relatively slow response and possible non-uniform surface temperatures if they are not properly selected, installed, sized and distributed in the room.

Investigation of radiant cooling panel (RCP) systems is performed using analytical modeling, experimental measurements and computational fluid dynamics (CFD) simulations. Numerical and analytical models for radiant cooling panels had been proposed by previous researchers [2–5]. Their models were developed under natural convection conditions. Jeong and Mumma [6] developed a simplified model for

estimating a correlation to evaluate cooling capacity for a RCP installed on ceiling for either natural convection or mixed convection of mechanically ventilated spaces. The simplified model clearly showed that the panel cooling capacity is enhanced by mechanical ventilation systems.

Kim et al. [7] compared two types of heating, ventilating, and air-conditioning (HVAC) systems. The first was a RCP and the second was an all-air cooling system. They analyzed cooling of semi-enclosed space which opens into an atrium space under steady-state conditions during summer season. They used CFD simulation which was coupled with radiative heat transfer simulation and HVAC control system. This method was able to analyze the indoor cooling load with changes of thermal environments. The radiation-panel cooling system was found to be energy efficient and achieved thermal comfort.

Hybird cooling systems use RCP with ventilation systems. Corgnati et al. [8], Kim et al. [9], and Songa and Kato [10] investigated a hybrid cooling system applied to an office. The characteristics of indoor environment were examined using CFD simulation coupled with a radiation heat transfer simulation. They found that even under hot and humid outdoor conditions, the hybrid system coupled with radiant cooling would bring significant energy savings with achieving thermal comfort.

Vangtook and Chirarattananon [11] investigated the application of RCP using natural air for ventilation under hot and humid climate of Thailand using experimental measurements and simulation. The radiant cooling panel was cooled by circulating water. To avoid condensation on the cooling panel, the temperature of the supplied water to the panel was limited to 24℃. The results confirmed the good potential for application of radiant cooling. However, the limitation of the cooling panel temperature led to the expectation that the low heat capacity of the panel would limit its use to situations when loads were low.

The previous discussion revealed that the dew point temperature becomes a limiting factor in designing RCP; since condensation on the panel represents a major obstacle for lowering panel temperature, hence prevents enhancing radiation effect. Therefore, using RCP is limited by the surrounding air moisture content. This limitation dictated increasing the panel surface area. Previous results indicated also that the forced ventilation is used to capture moisture on cooling coils to avoid condensation on the radiant panels. This implies the use of a radiant panel combined with conventional forced air conditioning.

The aim of this study is to overcome condensation problem on the radiant panel. This is achieved by constructing a radiant cooling panel with a special material which is condensation repellant called Marmotex® as denoted by Marmox Egypt Co. [12]. This fabric-type material prevents condensation even when the panel temperature is lower than the surrounding dew point temperature. The study aims also to evaluate the performance of the suggested RCP. Performance evaluation measures are flow patterns, room temperature distribution, human thermal comfort, condensation rate and the electric power consumption. These objectives are achieved using numerical and experimental procedures in a vacant room served by RCP. The experimental measurements are used to validate the numerical technique while the numerical technique is used to predict temperature distributions in the room and heat transfer to

the cooling panel. The numerical technique is also used to study different cases other than those examined experimentally.

2. EXPERIMENTAL STUDY

2.1 Radiant Cooling Panel System

The radiant cooling panel system considered in this study uses air conditioning unit type of Marmox-Split® [12]. The RCP is 1.8 m wide with a front surface area of 0.936 m^2 (Figure 1-a). It is covered with a fibrous fabric to prevent water condensation on the surface. The front surface area of the radiant panel is cooled by finned coils and thus, it could absorb heat by radiation from the room and the heat can be transferred by convection with the surrounding air. This allows for sensible and latent heat removal from the room due to the low air temperature and provides low dew point temperature inside the room, which enhances thermal comfort.

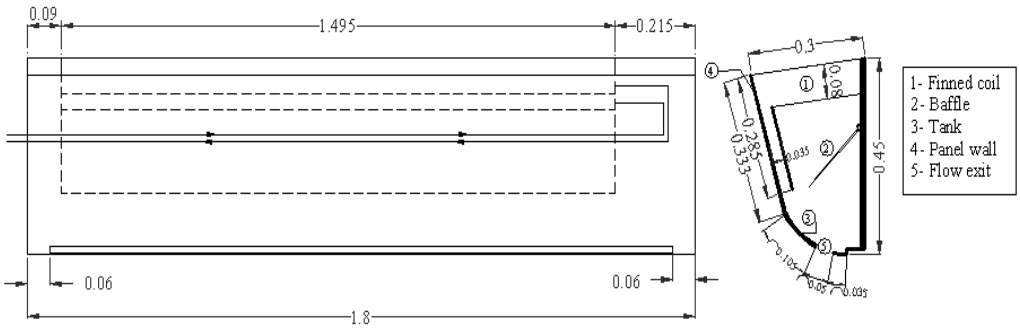

(a)

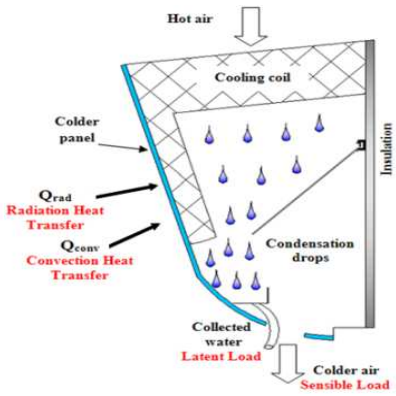

(b)

Figure 1: (a) Detailed drawing for the radiant cooling panel, (dimensions: m)
(b) Schematic diagram of the radiant cooling panel.

Figure 1-b shows a cross-section of the radiant cooling panel. The air naturally moves from the upper opening, cooled using the finned coil (1) then, leaves the radiant panel at the exit slot (5). Condensed water formed over the baffle (2) and over the inner

panel wall is collected in the tray (3) and discharged through an external hose to measure condensation rate. Panel walls (4) are cooled by the cold air flowing inside the box as shown in Figure 1-a. The sensible heat load removed was considered as the summation of sensible load removed by air re-circulated through the panel, plus the heat transferred by radiation and convection from the panel front surface. The latent heat load is determined using the collected condensate water from the cooling coil.

2.2 Room Description

The radiant panel was examined in a room with the dimensions of 4.82 m length × 3.18 m width × 3.78 m height and is located between two adjacent similar rooms. The room has a large south-facing window of 2.85 m length × 2.15 m height and a north-oriented door of 2.22 m height × 1.20 m width. The RCP system was installed in the room at an elevation of 2.1 m from the floor as shown in Figure 2. The radiant panel was cooled using refrigerant which was supplied from the condensing unit installed outside the window [12]. The condensing unit uses refrigerant R410A. The condensing unit is driven by a single phase AC variable speed electric motor and its power consumption is 1090 W during cooling with coefficient of performance (COP) of 3.2. The condensing unit uses an inverter compressor with displacement volume of 8900 mm^3/rev and cooling capacity of 2650 W at 60 Hz. The condensing unit works in the frequency range 18 to 120 Hz [12].

2.3 Measuring Instrumentations

Five parameters were measured in the room to examine system performance. These parameters are air temperatures and velocities, relative humidity, mean radiant temperatures and power consumption. Wall and air temperatures were measured with thermocouples connected to a digital recorder. Relative humidity was measured with a calibrated Testo 455 in the range 0-100 % ± 5%. A comfort level probe was used to measure the velocity and the temperature in the range of (0 to 5 m/s ±0.03 m/s, 0 to 50°C ±0.3°C). A globe thermometer in the range (0 to 120°C ±0.5 °C) was used to measure the mean radiant temperature. The electric energy consumption of the condensing unit was measured by a kilowatt-hour meter.

2.4 Measurement Locations

The temperature at the room boundaries were measured on each wall, floor and window. In addition, the air temperature was measured at the position 0.6 m above the panel. Inside the room, air temperatures were measured at different locations as shown in Figure 3. Points 1, 2, 3, 4, and 5 were considered at an elevation of 1.2 m measured from the floor while point 12 and point 11 were located at the center of the room at an elevation of 0.15 m and 1.7 m respectively. These positions were selected according to the BSR/ASHRAE Standard 55P [13]. Air velocities and mean radiant temperatures were measured as well at points 1-5 while relative humidity was measured only at point 3. The temperature, relative humidity and velocity were measured for the return air to the panel at point 6. The temperature was measured also for the exit air from the panel, exit air from the coil, inner surface and outer surface of the panel at the locations 7, 8, 9, and 10, respectively. The exit air velocity was measured at point 7. Finally, the

condensation rate from the panel was calculated from the amount of collected condensate per hour.

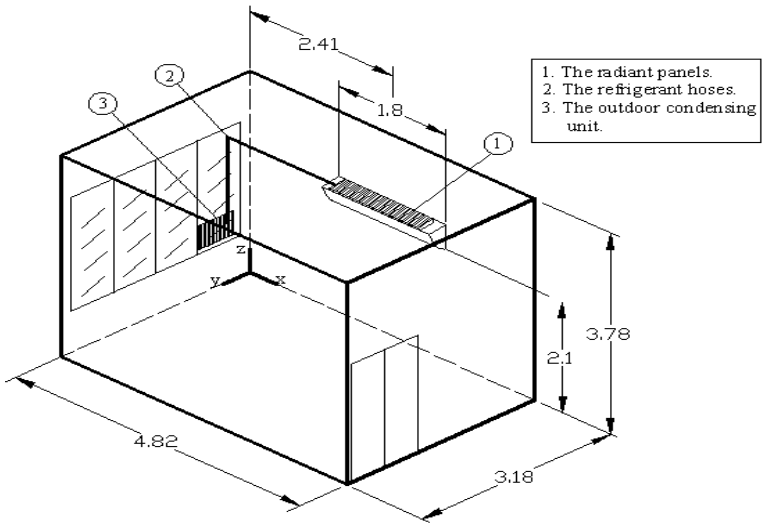

Figure 2: Location of the radiant cooling panel in the room (dimensions: m)

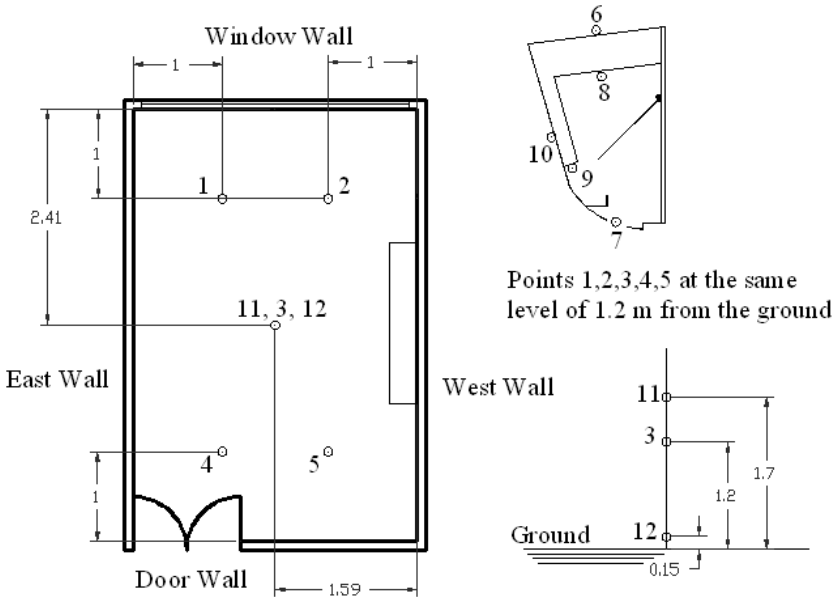

Figure 3: Distribution of the thermocouple probes (dimensions: m)

3. EXPERIMENTAL RESULTS

The radiant cooling panel was tested during the period from 8 October 2009 to 19 October 2009. Figure 4 shows the ambient temperature variation during that period and inside room temperature at the selected locations. The figure shows that the ambient air

temperature changed in the range from about 23˚C at night to about 34˚C in the afternoon in almost all days. The maximum ambient temperature was achieved in last two days as 38˚C and the minimum temperature was 23˚C. Figure 4 shows also temperature variation at three levels namely 1.7m (T_{11}), 1.2m (T_{av}) and 0.15m (T_{12}) measured from the ground. Where (T_{av}) is the average air temperature of five points located at that elevation. The figure shows that the room temperature was cooled to approximately 23.5˚C. Air temperatures at elevations 0.15m and 1.7m had almost constant difference of about 2˚C over the studied period.

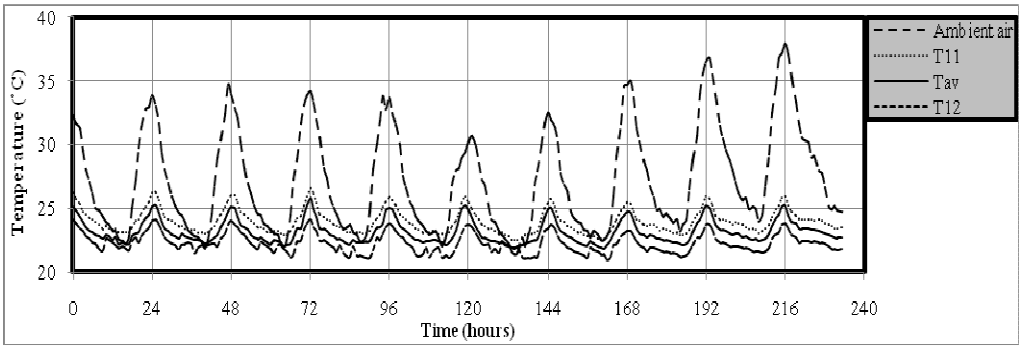

Figure 4: Ambient and room temperature variations

3.1 Temperatures through the Radiant Panel

Figure 5 shows temperature variations through the radiant panel. The figure shows that, in first three days, relatively high temperatures were obtained around the panel which was caused by the starting period of the system. However, for the remaining days, lower temperatures were achieved. The temperature of return air to the radiant panel (T_6) was approximately equal to room temperature with the average at 23.5˚C. Then, the air was cooled by the cooling coil to T_8 and T_9 to average temperature of 3.5˚C. Subsequently, the air temperature increased to supply flow temperature T_7 with average temperature 11.5˚C. This caused cold temperature of panel surface T_{10} with average temperature 8.6˚C.

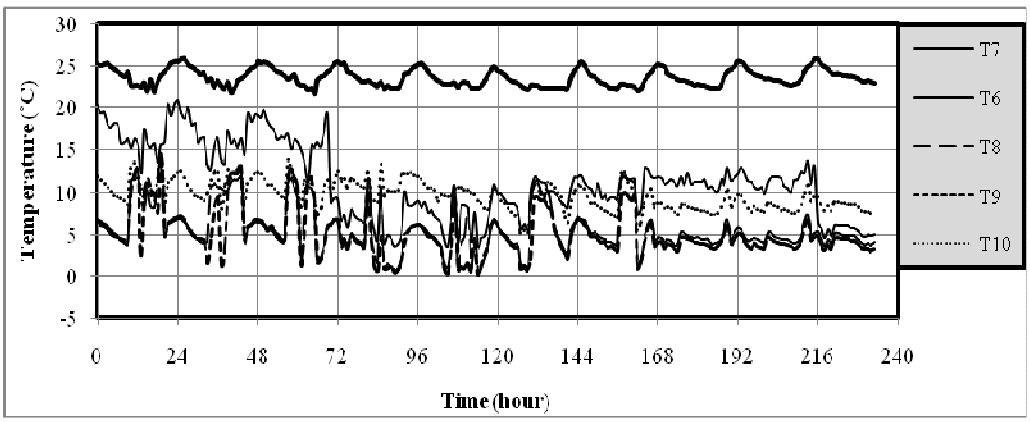

Figure 5: Temperatures variations through the radiant cooling panel

3.2 Thermal Comfort

The predicted percentage of dissatisfaction (PPD) was calculated according to ASHREA standards [13] as an indication for thermal comfort. Human thermal-comfort depends on room temperature, relative humidity, air velocities, and mean radiant temperature. These parameters were measured in selected days simultaneously at 13:00 solar hour. The inside and outside air temperature and relative humidity were measured and the inside mean radiant temperature was measured as well (Table 1). The outside average conditions were 35˚C and 37% relative humidity while the average room conditions were 25˚C and 27% relative humidity. The average mean radiant temperature inside the room was about 26˚C. The average air velocity in the room was about 0.05 m/s. However, the exit air velocity from the panel to the room was about 0.4 m/s, and the exit air temperature from the radiant cooling panel to the room was about 8˚C.

The PPD was calculated for two cases according to the metabolic rate. These cases are the quiet activity and relaxed standing referred here with three numbers as indicated in Table 1. The first number 0.5 clo corresponds to light summer clothing while the second number is metabolic rate which is 1 met for seated and quiet activity and 1.2 met for relaxed standing activity. The third 0 denotes that there is no external work or activity. The maximum calculated PPD for (0.5, 1, 0), and (0.5, 1.2, 0) were about 7.5% and 8.4% respectively. These values confirmed the existence of thermal comfort by using radiant panel systems in these conditions.

Table 1: Thermal comfort in the room at hour 13:00 solar time

Selected days	Ambient air temp ˚C	Ambient relative humidity %	Room air temp ˚C	Room relative humidity %	Mean radiant temp ˚C	Room air velocity m/s	Inlet air velocity m/s	PPD (0.5, 1, 0)	PPD (0.5, 1.2, 0)
13/10	33.5	41	25	35	26	0.06	0.32	7.5	6
17/10	35.5	42	25.5	32.5	26.5	0.04	0.39	5.8	8.4
18/10	37.5	37	25.5	22.5	26	0.06	0.58	6.6	6.4
19/10	36	37	25	23	26	0.05	0.52	7.4	6

3.3 Water Condensation and Power Consumption

The rate of water condensation from the panel provides a measure for the reduction in the absolute humidity in the room and in addition it measures the success in the removal of the latent heat. Condensation rate was measured in selected days by collecting condensate water over a defined time period. Table 2 shows the rate of water condensation which changed from about 0.07 g/s to 0.105 g/s. The table shows also the electric power consumption of the condensing unit with radiant cooling panel which has an average of about 400 W. The minimum and the maximum power consumptions were about 360 W and 450 W, respectively. Based on the cooling load of the room, the COP changed from 2.2 to 2.5.

Table 2: Condensation rates and power consumptions

Selected days	Condensation rates (g/s)	Power consumptions (W)
13/10	0.070	360
17/10	0.105	380
18/10	0.095	450
19/10	0.055	420

4. NUMERICAL STUDY

Calculations using CFD were performed to understand the flow pattern in the room and to predict different operating conditions other than those examined experimentally. Heat transfer and fluid flow simulation in the room during the period of the measurements is very complicated because the temperature of the ambient air is changing which necessities the simulation of the unsteady flow and heat transfer. However, the ambient air temperature in the afternoon was relatively constant from 2 pm to 5 pm and in addition, the system had almost reached steady conditions. Therefore, the simulation performed here is based on the assumptions of quasi-steady state conditions prevail for the duration from 2 pm to 5 pm. The air was considered to be incompressible and follow the ideal gas law with constant pressure and allowing air density changes due to variation in air temperature.

In natural convection flow, the strength of buoyancy-induced flow is measured by the Rayleigh number. Based on the difference between the wall temperature of 20˚C and air temperature of 25.5˚C, Rayleigh number is found to be 6.4×10^9 [12]. Since the turbulent flow occurs at $Ra_L > 10^8$ [14] the flow was considered in this study as turbulent flow.

Ponser et al. [15] compared results from the CFD simulation with experimental measurements of indoor air flows. They examined the indoor air flow by using laminar, standard k-ε turbulence model and RNG k-ε turbulence model. They found that the RNG k-ε model is the most accurate model in predicting the room flow. The RNG k-ε model predicts effective viscosity that accounts for low-Reynolds number effects [16]. Therefore, the RNG k-ε model was used in the present study. For the radiation model, the discrete ordinates (DO) radiation model [17] was used to solve the radiative transfer equation for a finite number of discrete solid angles.

In the present numerical study, the pressure-velocity coupling was achieved by SIMPLEC algorithm. Second-order upwind discretization scheme was considered for pressure and DO radiation model, and QUICK discretization scheme for momentum, turbulent kinetic energy, turbulent dissipation energy, and energy equations were considered.

4.1 Grid Generations

The considered computational domain includes the entire room with the radiant panel installed in the room. Inlet and outlet boundaries were considered for the panel. It was assumed that the air enters the room as supply air from the panel slot and exits the room from the upper opening of the panel as return air. The exit air, return air and panel wall boundary conditions were obtained from the experimental measurements.

Three-dimensional grid was generated to solve continuity, momentum and energy equations. The cells were distributed in a suitable way to enhance convergence and to reduce the numerical error. For best distribution of cells, the computational domain was divided into fifty blocks. Using block structured topology allowed the distribution of cells using different densities in each block. Dense grids were assigned for blocks which would have large temperature and velocity gradients. While relatively coarse grids were used in blocks which have relatively low gradients. Therefore, the computational grid was generated with about 543000 cells which could be solved using personal computer.

4.2 Boundary Conditions

The boundary conditions were selected using the measurements corresponding to 18 October 2009 in the period from 2:00 pm to 7:00 pm. Figure 6 shows temperature distribution during this period and indicates that although the ambient temperature T_{amb} changed from about 38 to 30˚C, the room temperature had almost constant values.

The non-slip boundary conditions were considered for all walls. The emittance for all walls was estimated as 0.9 and for the window as 0.91 while the transmittance for the window was considered as 0.80 [14]. The temperature boundary conditions as linear piecewise distribution were obtained from the experimental measurements as shown in Figure 7. The figure indicates that the temperature distribution of the wall under the radiant cooling panel changed from 15.4˚C to 23.7˚C which was caused by the cold air exit from the panel.

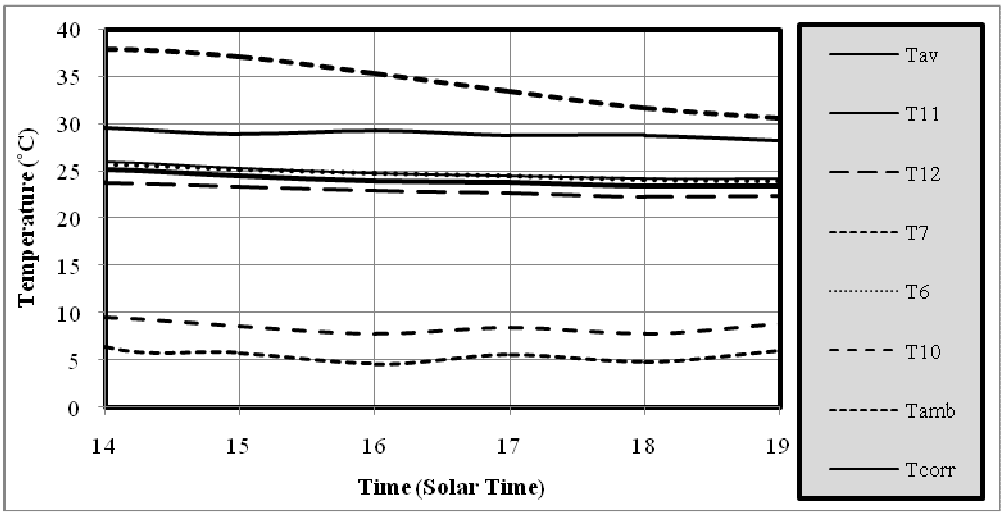

Figure 6: Air temperature distribution in 18 October 2009 from 2:00 pm to 7:00 pm

The radiant panel was considered at temperature of 9˚C and emittance of 0.98. The exit air velocity was considered at 0.35 m/s and temperature of 7˚C representing average measured velocity and temperature at this location. The turbulence intensity was estimated at 27% [18] for natural convection at low velocities while turbulence

length scale l was considered as $0.07\ L$, where L is hydraulic diameter of panel slot as $0.097\ m$ [19] leading to turbulence length scale of $l = 0.0068\ m$.

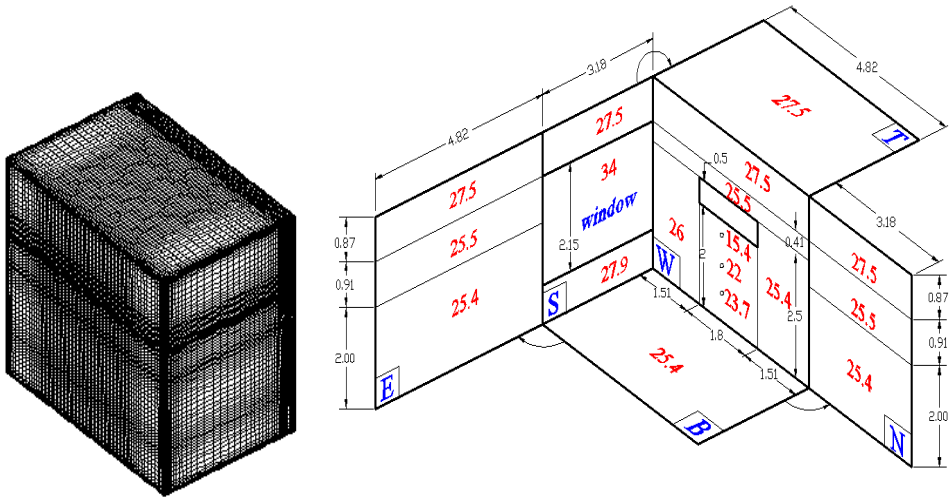

a) Computational grid b) Room temperature boundary conditions

Figure 7: Computational grid and temperature boundary conditions

5. RESULTS AND DISCUSSIONS

5.1 Model Validation

Model validation was firstly achieved by performing heat balance and comparing the numerical results to experimental measurements. Heat balance had been performed for the entire room. The cooling coil load consists of sensible heat and latent heat. The sensible heat was represented by the change in air temperatures of inflow and outflow from the cooling coil. The latent heat referred to the change in enthalpy due to change in humidity ratio. The results revealed sensible heat of 691 W, latent heat of 226 W, total heat of 918 W, and sensible heat factor of 0.753. Based on the slot area of panel $(0.084\ m^2)$ and average exit air velocity (0.35 m/s), the air mass flow rate was $0.036\ kg/s$. Then, condensation rate was $0.09864\ g/s$. The percentage error of the condensation rate between the calculations and the experimental measurements was 6.1%. Therefore, the numerical results were considered satisfactory.

Temperature distributions obtained from the numerical calculations were also presented in the center vertical line (Line 1), and the vertical plane dividing the room through the radiant panel (Plane-1) as shown in Figure 8. The air temperature distribution is shown in Figure 9 for Line-1. The figure indicates that the numerical results showed good agreement with the experimental measurements. The increase in air temperature near the floor could not be measured in the experimental procedure. This requires placing the thermocouple very close to the ground. However, outside the near-floor region, the agreement between measurements and calculations is quite good. The total heat transferred for walls obtained from the numerical model was -764.97 W

and the sensible cooling coil load was 691 W corresponding to a percentage error of 10.7% which is considered acceptable.

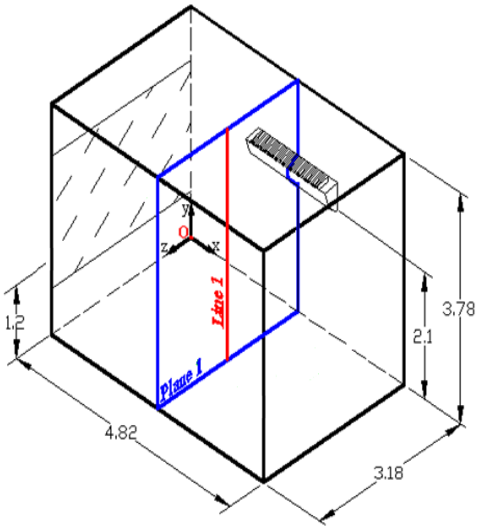

Figure 8: Locations of the examination plane and line in a room

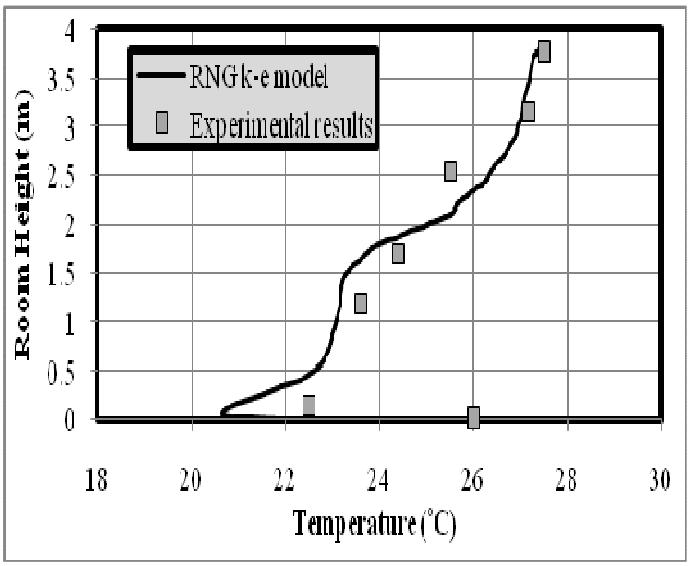

Figure 9: Comparison between numerical results and experimental measurements over Line-1

5.2 Velocity and Temperature Field

Figure 10-a, shows contour plots for the velocity magnitude on Plane 1. The figure indicates that the maximum air velocity was predicted below the radiant cooling panel and beside the surface of radiant panel due to the cooling process, and the associated density increase. At the region above the radiant panel, the air motion was significantly quiescent except the air entering to the radiant panel. Figure 10-a indicates that the velocity levels were relatively small with the maximum velocity magnitude of about 0.05 m/s since the buoyancy effect is the only driving force for the flow. The maximum velocity was predicted near to the walls in the region of thermal boundary layer where the temperature gradient was high. The room temperature distribution represented by contours on Plane 1 given in Figure 10-b indicates that the air is stratified and the room can be divided into three regions. These regions are the coldest air near the floor with temperature of about 22.5˚C, the room occupying region between 0.5 m to 2 m from floor with temperature of about 25˚C, and the hot air zone above the level of 2.5 m with temperature of about 27.3˚C.

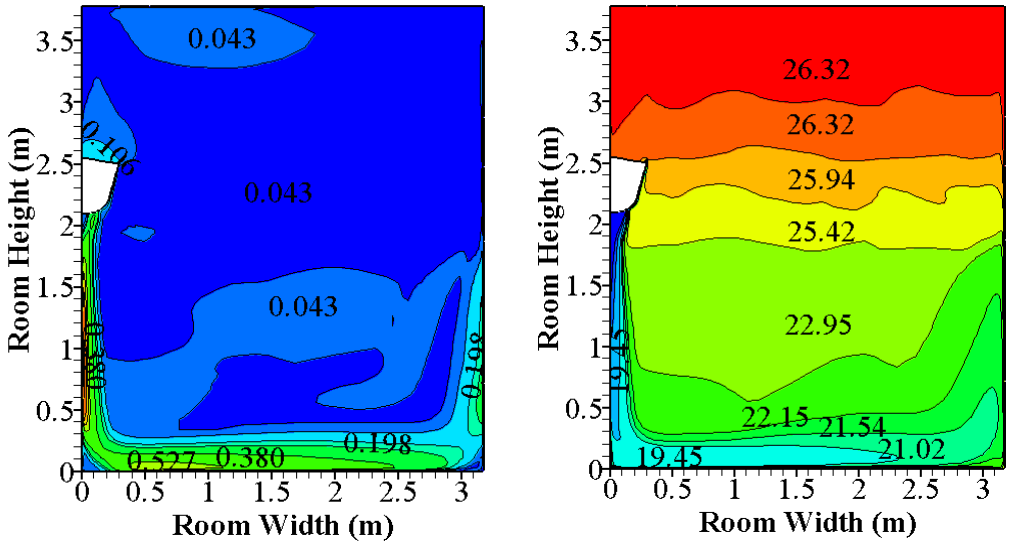

a) Velocity magnitude b) Temperature

Figure 10: Contours for the velocity magnitude and temperature on Plane 1

5.3 Effect of Radiant Cooling Panel Temperature

The previous section revealed that the numerical model was able to predict room temperature distribution. Therefore, the model was extended to examine the effect of radiant cooling panel temperature on the room flow and temperature distribution. Three case studies were examined with different panel surface temperature and inlet air temperature as indicated in Table 3. These parameters had affected the inside air temperatures in the room. The first case (Case 1) was discussed in model validation.

Table 3: Comparison of some parameters for radiant panel cooling (From numerical calculations)

Parameters	Case 1	Case 2	Case 3
Panel surface temperature (˚C)	9	5	5
Inlet air temperature (˚C)	11.5	11.5	7
Room temperature (˚C)	23.5	23.5	21
Radiation heat transfer of panel surface (W)	-84.75	-105.68	-105.67
Heat transfer of panel surface (W)	-147.43	-186.7	-183.62
Rad./ heat ratio for panel surface	57.48 %	56.60 %	57.55 %
Panel heat/total heat transfer ratio	19.27 %	24.22 %	22.64 %
Sensible cooling coil load (W)	-691	-707	-772
Panel heat/sensible load ratio	21.34 %	26.41 %	23.78 %
Latent cooling load (W)	-226	-242	-297
Heat flux (W/m^2)	-817.28	-823.61	-866.68
Radiation heat flux (W/m^2)	-90.54	-112.91	-112.90

Air temperature distribution over Line-1 was compared for the three cases as shown in Figure 11. The total heat transfer for cases 1, 2, and 3 were -764.97 W, -770.9 W, and -811.21 W, while the sensible cooling coil load were -691W, -707 W, and -772 W, respectively. Therefore, the percentage errors were 10.7 %, 9.04 %, and 5.08 %, correspondingly [12]. Despite the panel surface temperature was decreased to 5˚C, the air temperature distribution in the room over Line-1 was not affected by such change in panel surface temperature. However, the sensible cooling coil load was increased by 2.3%. In Case 3, the panel surface temperature was decreased to 5˚C and the inlet air temperature was decreased to 7˚C. As a result, the air temperature in the room decreased by about 2˚C at the elevation of 1.7 m from the floor, and about 1˚C at elevations from 1.7 m to 2.55 m, and about 0.5˚C at elevations from 2.55 m to the roof. Decreasing the panel surface temperature (from 9˚C to 5˚C) increased the radiation heat transfer to the panel surface (from 84.75 W to 105.67 W) and the heat transfer of panel surface (from 147.43W to 183.62 W).

Table 3 also compares the three case studies. The ratios of radiation heat transfer to panel surface heat transfer were above 55%. This confirms that the panels work as radiant panels. To estimate how much the surface of radiant panel contributed in cooling process, the ratio of heat transfer of panel surface to sensible cooling coil load was calculated and its value was about 23%. The remaining percentages were for cooling air and removing latent load. In addition, the latent load could be compared for the cases 1, 2, and 3 as it slightly increased from -226 W to -297 W, because of decreasing supply air temperature from radiant panel. Also, the heat fluxes for cases 1, 2, and 3 were -817.3, -823.6, and -866.7 W/m^2, respect vely. In addition, the radiation heat fluxes were -90.5, -112.9, and -112.9 W/m^2 for the same order.

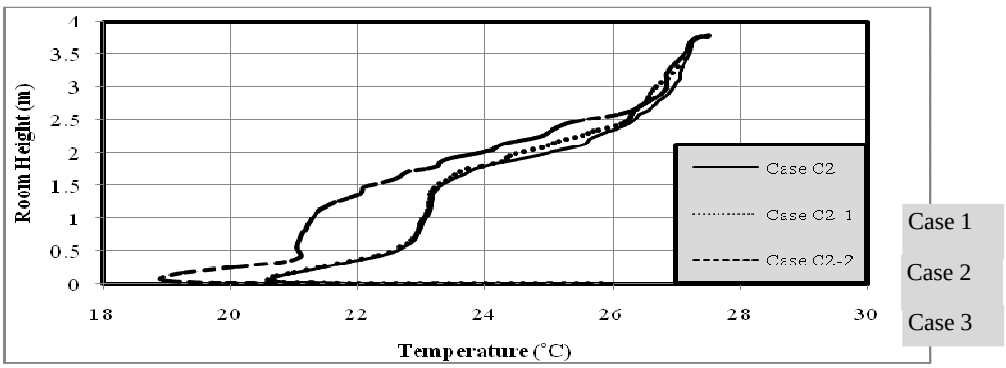

Figure 11: Air temperature distribution on Line-1 for different panel temperatures

The comparison between case studies 2 and 3 indicates that the total radiation heat flux is the same for these case studies. This was attributed to the same panel temperature and the same wall temperature boundary conditions. However, for case 1, lower heat transfer was achieved by radiation due to the increased surface temperature. The increased sensible load for case 3 was caused by the decrease in supply air temperature which was decreased for case 3 to 7˚C compared to 11.5˚C in cases 1 and 2.

6. CONCLUSIONS

In this paper, a novel design of radiant cooling panel was tested in a room using experimental measurements and numerical calculations. It is concluded that the new design were found to be appropriate for use as a good air conditioner. It removed latent load hence reduced relative humidity without condensation on the radiant panel surface and lowered room temperature. As a result, thermal comfort was achieved with low energy consumption. The new design is surely called a radiant panel in spite of the small surface area, as the ratio of radiation to the surface heat transfer was over 50%. The model validation was investigated by using CFD technique. It was found that the numerical technique gave reasonable results compared to experimental measurements. The numerical calculations showed that the cooling panel surface temperature does not significantly affect room temperature while the return air temperature changes room temperature.

Acknowledgements

The authors would like to acknowledge the support from Marmox Company, Egypt for supplying the equipment used in this study.

6. REFERENCES

[1] ASHRAE, 2000, “HVAC Systems and Equipment Handbook (SI)”, S6, “Panel heating and cooling”.

[2] Chen Q., Kooi J.v.d.r., 1988, "Accuracy: a computer program for combined problems of energy analysis, indoor air flow and air quality", ASHRAE Transactions, Vol. 94 (2), pp. 196–214.

[3] Kilkis B.I., Sager S.S., Uludag M., 1994, "A simplified model for radiant heating and cooling panels", Simulation Practice and Theory, Vol. 2 (2), pp. 61–76

[4] Stetiu C., Feustel H.E., 1995, "Development of a model to simulate the performance of hydronic/radiant cooling ceilings", Lawrence Berkeley Laboratory (LBL) Report No. 36636, Berkeley, CA.

[5] Bohle J., Klen H., 2000, "Design of panel heating and cooling systems", ASHRAE Transaction, Vol. 106 (1), pp. 677–683.

[6] Jeong J. and Mumma S. A., 2004, “Simplified cooling capacity estimation model for top insulated metal ceiling radiant cooling panels”, Applied Thermal Engineering, Vol. 24, pp. 2055–2072.

[7] Kim T., Kato S., and Murakami S., 2001, “Indoor cooling/heating load analysis based on coupled simulation of convection, radiation and HVAC control”, Building and Environment, Vol. 36, pp. 901–908.

[8] Corgnati S.P., Perino M. a, Fracastoro G.V., and Nielsen P.V., 2009, “Experimental and numerical analysis of air and radiant cooling systems in offices”, Building and Environment, Vol. 44, pp. 801–806.

[9] Kim T., Kato S., Murakami S., and Rho J., 2005, “Study on indoor thermal environment of office space controlled by cooling panel system using field measurement and the numerical simulation”, Building and Environment, Vol. 40, pp. 301–310.

[10] Songa D. and Kato S., 2004, “Radiational panel cooling system with continuous natural cross ventilation for hot and humid regions”, Energy and Buildings, Vol. 36, pp. 1273–1280.

[11] Vangtook P. and Chirarattananon S., 2006, “An experimental investigation of application of radiant cooling in hot humid climate”, Energy and Buildings, Vol. 38, pp. 273–285.

[12] Seyam S. F., 2011, "Numerical and experimental investigation of flow pattern, temperature distributions and heat transfer in a room served by radiant panel systems", M.Sc. Thesis, High Institute of Technology, Benha University, Benha, Egypt**.**

[13] ASHRAE STANDARD, BSR/ASHRAE Standard 55P, 2003, Proposed American National Standard Thermal Environmental Conditions for Human Occupancy, 3rd public review.

[14] John H. Lienhard, 2003, “A heat transfer textbook”, third edition, Cambridge.

[15] Posner J. D., Buchanan C. R., and Dunn-Rankin D., 2003, “Measurement and prediction of indoor air flow in a model room”, Energy and Building, Vol. 35, pp. 515-526.

[16] Choudhury D., 1993 “Introduction to the renormalization group method and turbulence modeling”, Fluent Inc, Technical Memorandum TM-107.

[17] Chui E. H. and Raithby G. D., 1993, “Computation of Radiant Heat Transfer on a Non-Orthogonal Mesh Using the Finite-Volume Method”, Numerical Heat Transfer, Part B, Vol. 23, pp. 269-288.

[18] Casey, M. and Wintergerste, T., 2000, “ERCOFTAC special interest group on quality and trust in industrial CFD, Best practice guidelines“.

[19] Fluent manual version 6.3, 2006.

فحص عملى وعددى لنظام ألواح تبريد مشعة مقاوم للتكاثف

تستخدم ألواح التبريد المشعة اسطح ذات درجات حرارة محددة لإنتقال الحرارة اساسيا عن طريق الاشعاع. تتناول هذه الدراسة فحص لأداء نظام تبريد ذو ألواح مشعة بإستخدام قياسات معملية وحسابات عددية. يتم اختبار نظام التبريد بالالواح المشعة فى غرفة خالية حيث يتم دراسة استهلاك الطاقة ومعدلات التكثيف والراحة الحرارية معملياً. علاوة على ذلك فقد تم استخدام نموذج عددى لدراسة حركة الهواء داخل الغرفة وتوزيع درجات الحرارة. تم حساب السريان ودرجات الحرارة عن طريق حل معادلات الاستمرارية وكمية الحركة بالاضافة لمعادلة الطاقة. تم حل السريان المضطرب بأستخدام نموذج ثنائى المعادلات كما تم حساب معدلات انتقال الحرارة بالإشعاع. تم دراسة تأثير درجة حرارة الألواح المشعة ودرجة حرارة الهواء عند خروجة من الألواح على توزيع درجات الحرارة بالغرفة. توضح نتائج هذا البحث قدرة النموذج العددى على حساب توزيع درجات الحرارة فى الغرفة بدقة مناسبة. تم التوصل خلال الدراسة الى ان الواح التبريد المشعة توفر الراحة الحرارية واقتصادية فى استهلاك الطاقة.